

Electronics II

Course Project Report

Sean Greenwood

Bench 15 424

EECE – 3110.802

Electronics II Final

Submission Date: 4/27/2026

Due Date: 4/22/2026

I. Abstract

This project presents the design and construction of a modified infinity mirror system that integrates analog-to-digital conversion, sensor input, and mechanical motion to create a dynamic visual display. The system uses an ADC0804 analog-to-digital converter to convert real-world temperature data from a thermistor into digital signals that control a large LED array.

Unlike traditional infinity mirrors, this design incorporates a low-current DC motor that rapidly spins the LED array, creating stunning visual effects. The system operates in two modes: a sensor mode, where LED behavior is controlled by the temperature input, and a predefined fully-on mode.

The project successfully demonstrates real-world signal representation, digital control of LEDs, and mechanical actuation, resulting in a visually interactive and technically complex system.

II. Equipment/BOM

Table 1. Bill of Materials

BOM:

Name	QTY	Comment
White LED	x40	
LM7805	x1	Voltage Regulator
DC 9V PS	x1	9V Battery
ADC0804	x1	ADC
2N2222	x8	Transistors
3D Prints	N/A	
DC Motor	x1	
0.1 µF CAP	x2	
150 pF CAP	x1	
Electrical Slip Ring	x1	
1 kΩ Resistor	x40	
10 kΩ Resistor	x1	
SPDT	x1	
10 kΩ POT	x1	
Thermistor	x1	

III. Introduction

An infinity mirror is an optical system that creates the illusion of infinite depth using two parallel reflective surfaces and a series of LEDs. Light reflects repeatedly between the mirrors, producing a diminishing pattern that appears to extend infinitely inward.

This project expands on the traditional design by incorporating real-world signal processing and mechanical motion. A thermistor is used to sense temperature, and the resulting analog signal is converted into digital form using the ADC0804. The LED array responds to this digital output, visually representing temperature changes.

Additionally, a DC motor rotates the LED array, creating a visual effect. This introduces a, enhancing the visual complexity of the display.

The project meets the requirement to represent a real-world signal and to integrate both electrical and mechanical engineering principles.

III Circuit Description

The system consists of four major sections:

DC Voltage Regulator

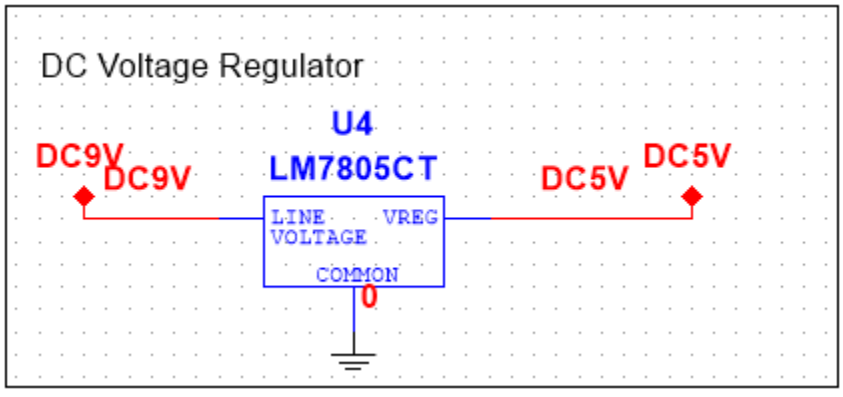

This portion of the circuit uses an LM7805 step-down converter to convert 9V DC to 5V DC. 5V in this project is used for powering the ADC0804. It is crucial to step down the voltage; the ADC0804 has a voltage range from 3.3V to 5V per its datasheet.

ADC0804 LED Controller

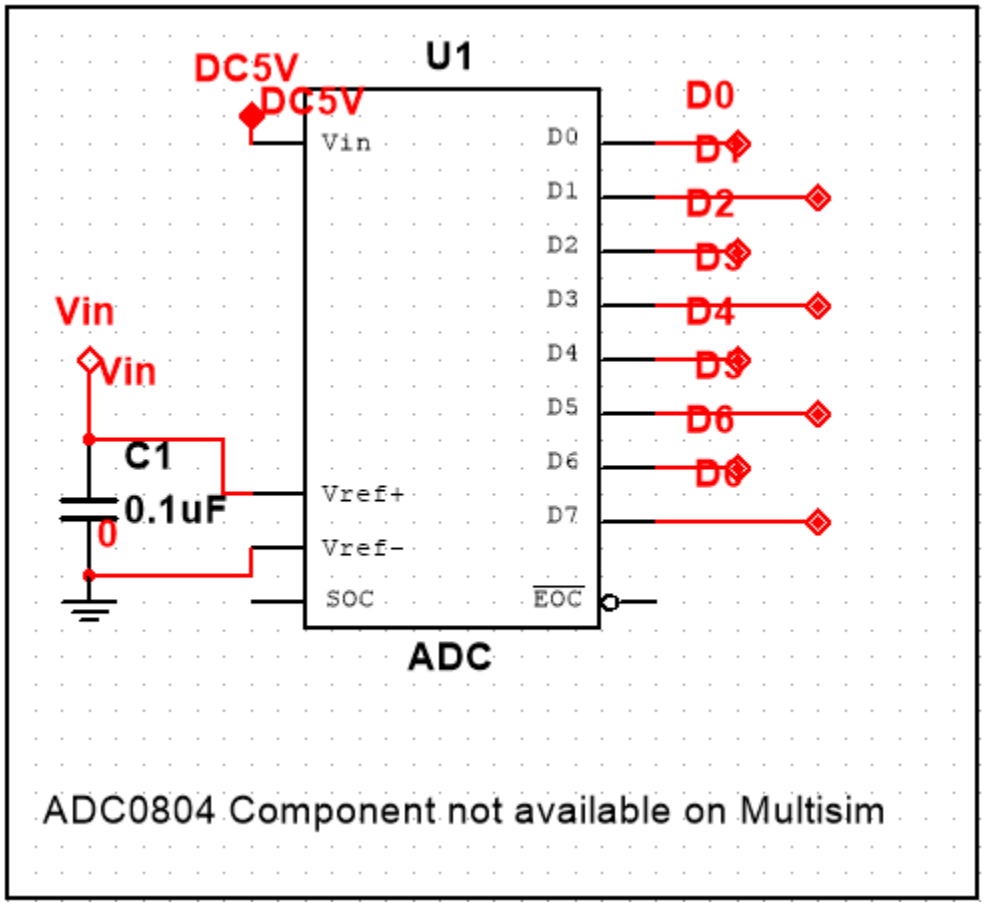

This portion of the circuit involves the ADC0804 used to convert the analog Vin to digital on the D0-D7 pins. As the component symbol is not available in Multism, the ADC setup (besides pins 11 through 18) has been copied from *Figure 23.* on page 16 of the "*ADC080x 8-Bit, µP-Compatible, Analog-to-Digital Converters datasheet (Rev. C)"* datasheet provided by Texas Instruments.

LED Driver Section

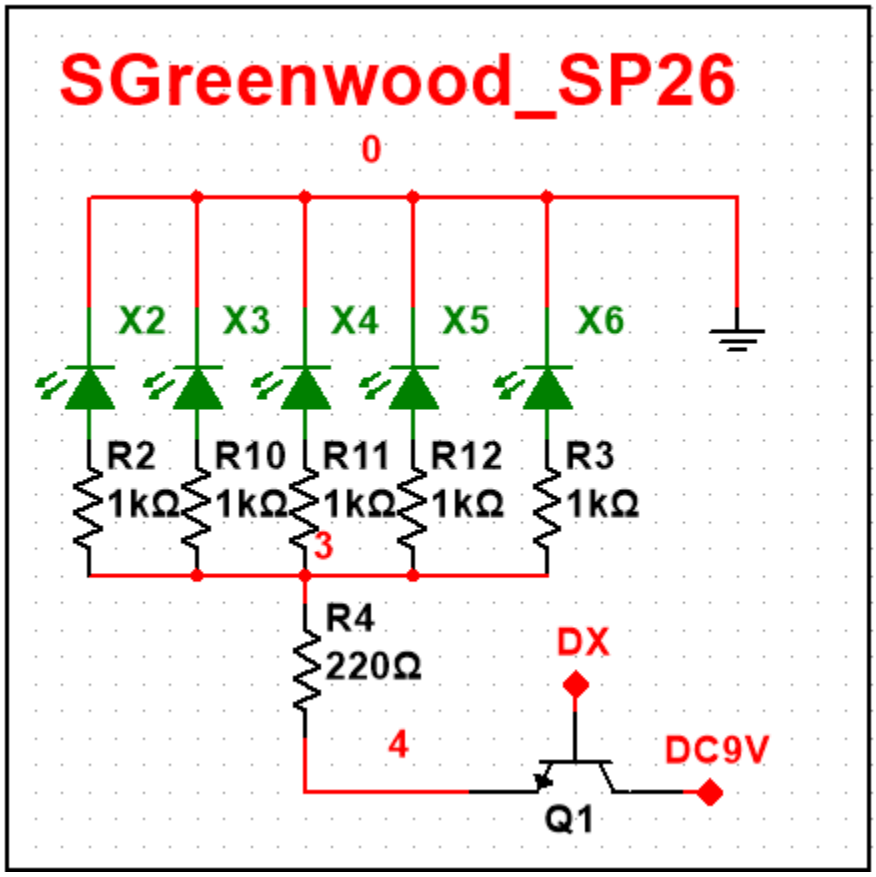

This portion of the circuit powered 40 LEDs despite the ADC0804's 200 mA maximum output. This system allows the ADC0804 to control an NMOS transistor via one of the digital output pins, switching the LEDs on and off. To control the current, the LEDs were connected in series with a 1kΩ resistor and a master 220Ω resistor. Eight of these circuits are used on each of the D0 to D7 pins.

Mechanical System

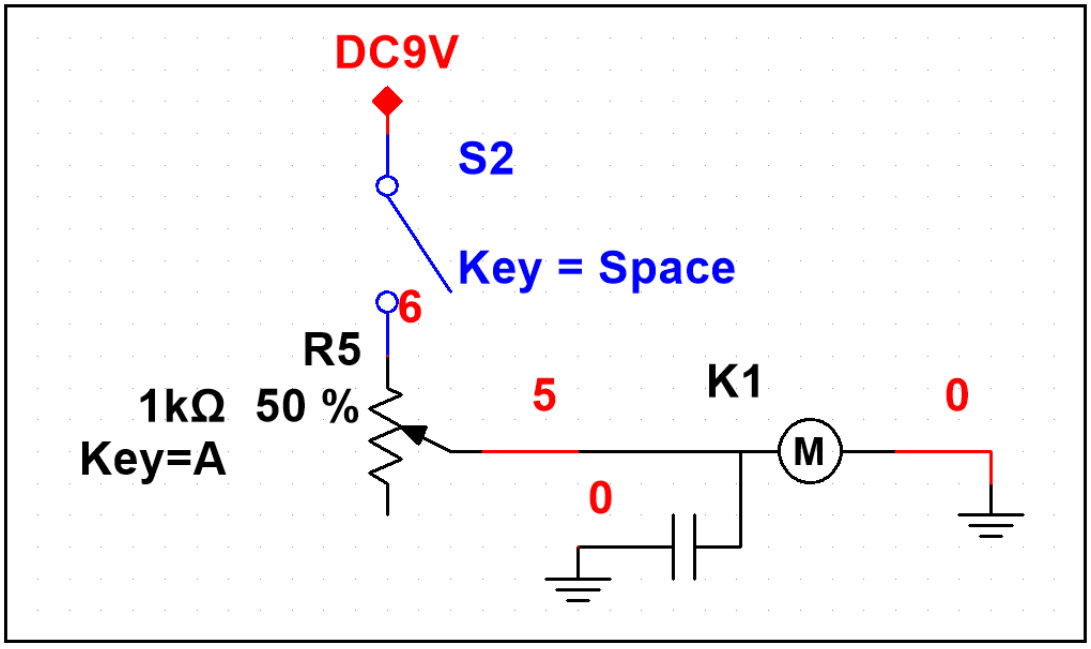

This circuit controls the DC motor that rotates the LED array. The potentiometer R5 allows the speed to be variably controlled.

Thermistor Sensor

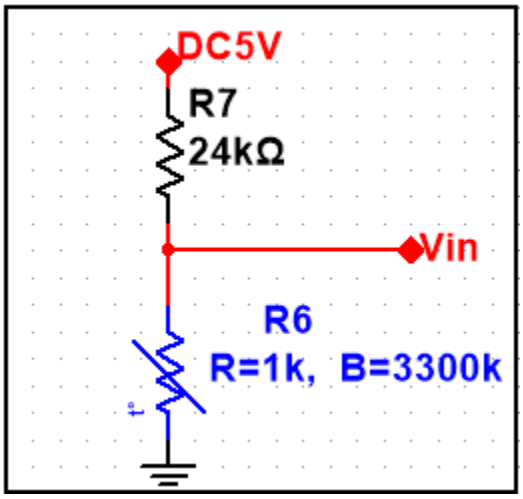

This sensor uses a voltage divider with a 24k ohm resistor. When the thermistor is cold, its value is 1k ohm, and Vin is roughly 0.49 volts because most of the voltage is dropped across the 1k ohm thermistor. When the thermistor is hot, its resistance increases to 3300k ohms, and the voltage drop across the resistor is very low, so Vin is roughly 5V.

IV Measurement Results

The prototype for the LED array was not built on a breadboard; instead, it was tested after installation in the rotation array ring. Current first measured above 200 mA, at roughly 600 mA. Then a 220-ohm master resistor was added to each branch to significantly lower the current. This brought the LEDs' overall brightness down to a much lower level, but it was still tolerable within the project scope.

The current draw from the ADC0804 and LEDs gave lots of headroom for the DC motor. The DC motor was then attached to a 2.49MOD gear with a center distance of 82.5mm. This was calculated with the Autodesk Inventor Pro gear design program.

V Electrical Design

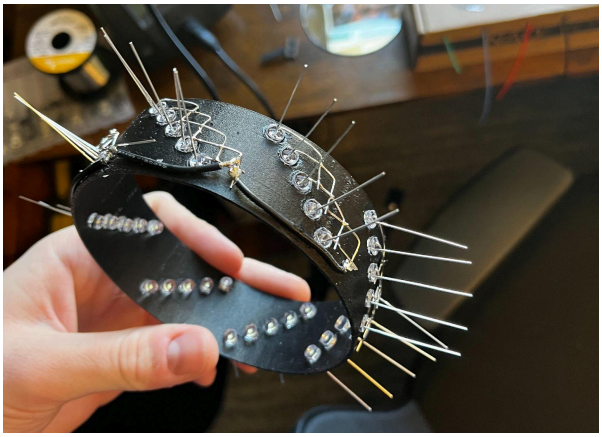	The process began by inserting the LEDs into a PETG-CF 3D-printed ring and bending the GND pins of each LED together. Then each leg was soldered and shorted to the black wires shown.
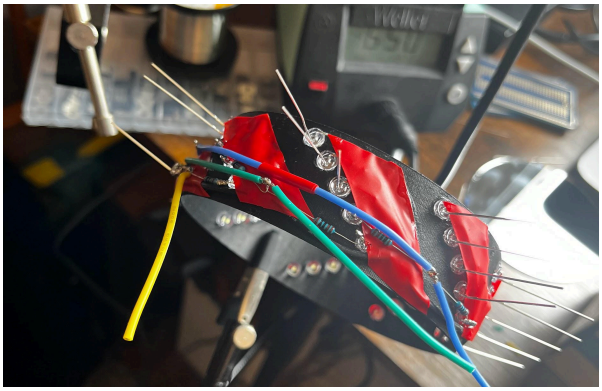	Then the control pins for each LED were wired with a 1k ohm resistor in series, with a differently colored wire connected to the other end of the resistor.

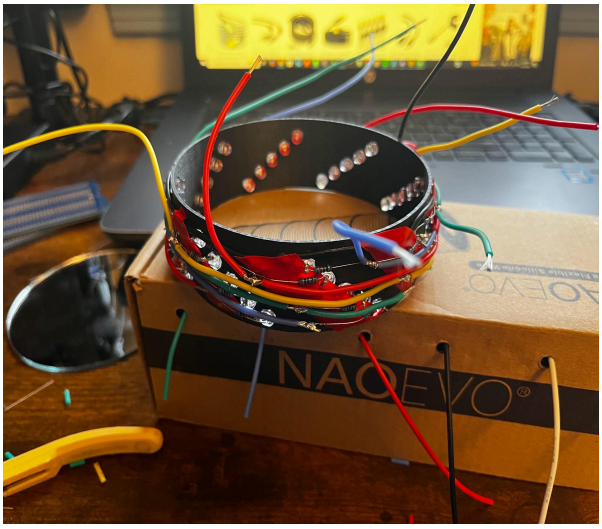	This is the end of the wiring portion of the LED array ring. Each color wire represents a different ADC0804 digital output pin control group (D0-D7).
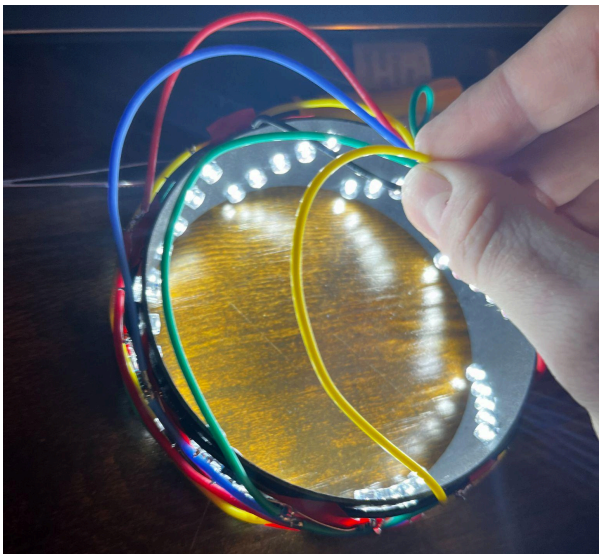	This was the final test to ensure there were no shorts. This also allowed me to test the LEDs' overall current draw, which came out to roughly 400 mA. This being over the project's current limit meant that another resistance was needed to decrease the current draw. A 220-ohm resistor was placed after each control wire, limiting the total current draw to around 50 mA.



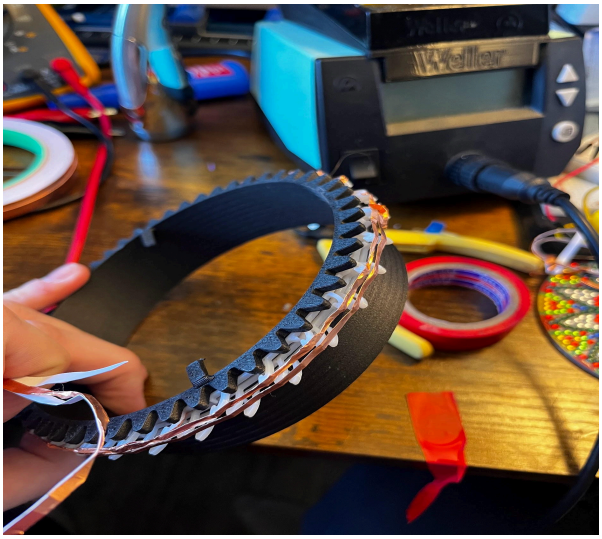

These two images show the first design of the electrical slip ring. This design incorporated the gear system and the conductors. The gear cylinder was printed with PETG-CF (carbon-fiber PETG), and the white conductor springs were printed with PETG for its greater flexibility. This design failed because it would have been too fragile for several operations of the device.

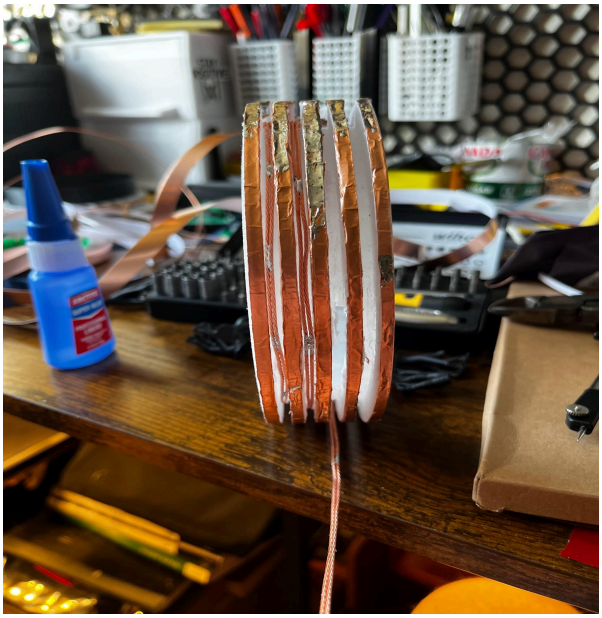	This was the second design of a homemade electrical slip ring. The project involved creating valleys and peaks with conductive material, with an electrode or brush dragging along the surface of the conductor. This design would not have been sturdy enough to withstand several device operations.
	This device is called an electrical slip ring. It allows one side to rotate while the other stays stagnant. This was the solution to a very large design problem with the previous images.

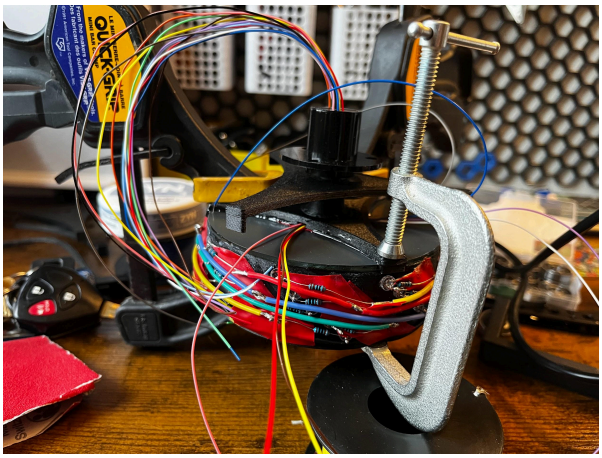	This image shows the attachment of the electrical slip-ring fixture to the LED array using super glue and C-clamps.

VI Mechanical Design

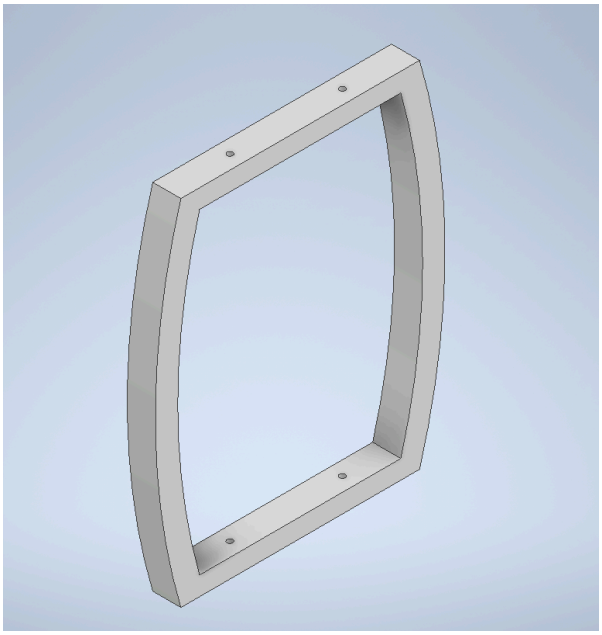	This is the **Main Frame** of the project. It helps align the bearings on which the spinning LED array sits. The electrical slip ring sits at the back of the frame and attaches at the base.

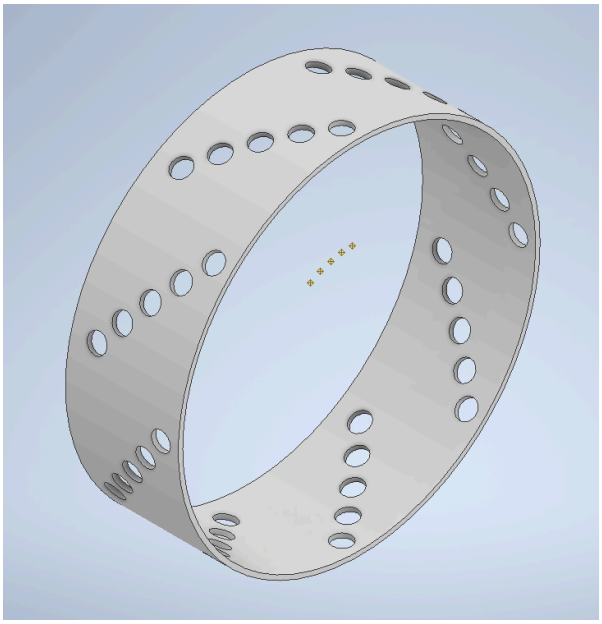	This is the **LED Ring**. This is the ring where the LEDs sat. Its diameter is the same as the mirror and plexiglass.
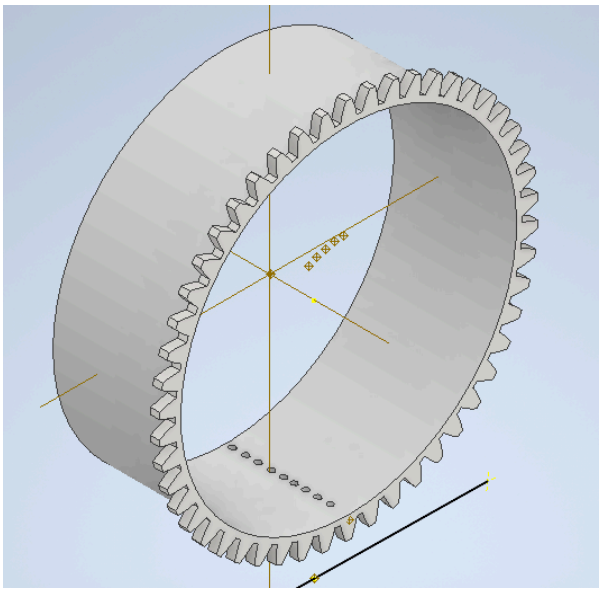	This is the **Main Gear**. Its diameter is large enough to fit the LED array with its electrical connections inside it. It mounts with the electrical slip ring diameter

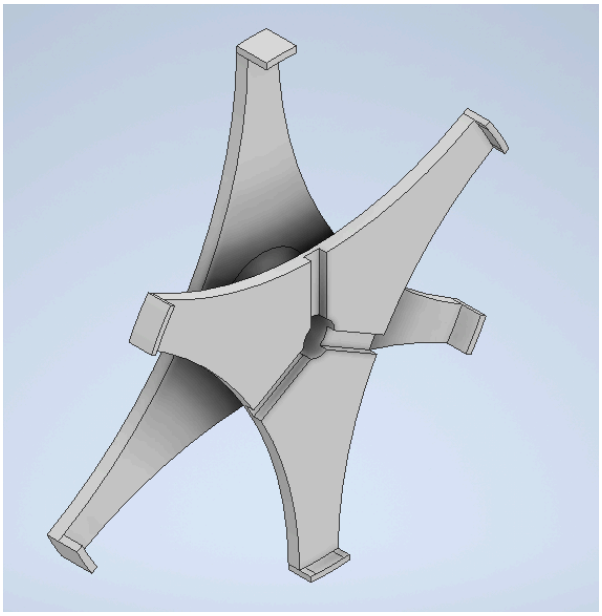	This is the **Electrical Slip Mount**. This aligns both the **LED Ring** and the **Main Gear**. It also has a hole in the center, allowing the rotating portion of the electrical slip ring to route its wires to the **LED Ring**.
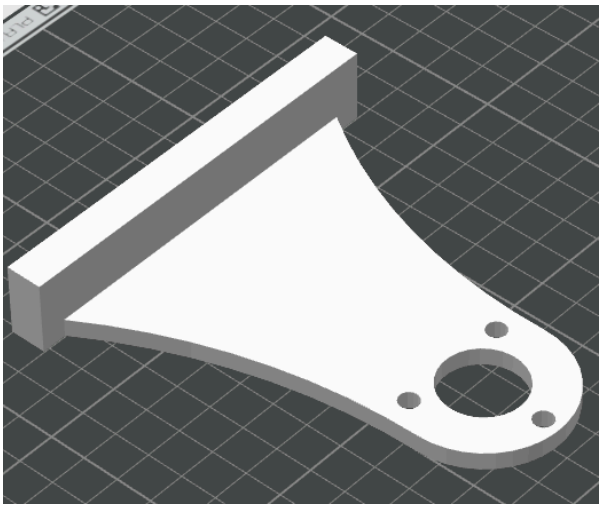	This is the **Electrical Slip Ring Stand**. It connects to the base of the **Main Frame** and holds the portion of the electrical clip ring that is not meant to rotate.

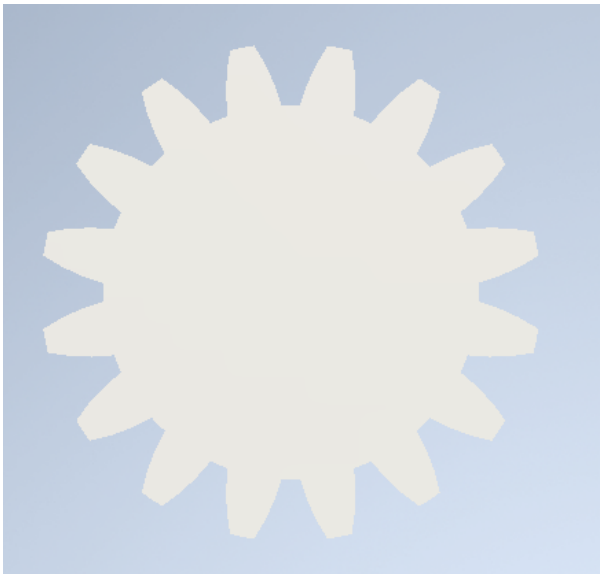	This is the **DC Motor Gear**. It connects to the low-current DC motor and rotates the **Main gear** at a 16:1 ratio.

VII Final Design Pictures





The final design was built with PETG-CF for its reliable strength and desired matte finish.

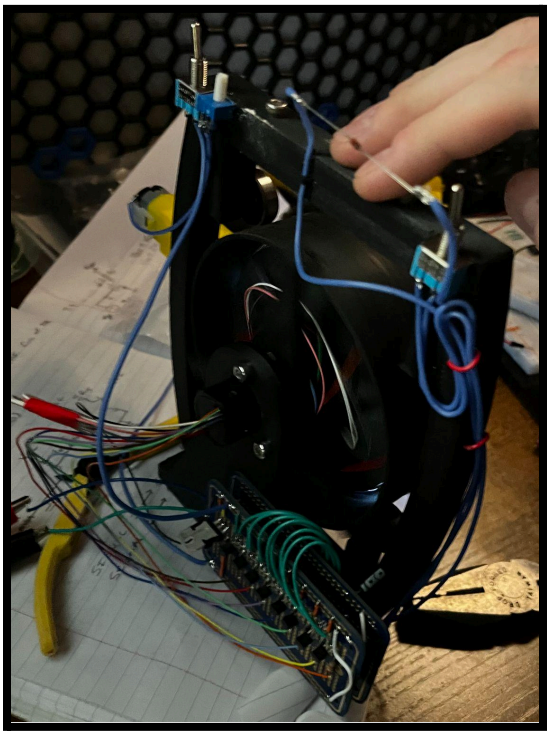

The design incorporates an electrical slip ring that allows the wires connecting the LEDs to rotate freely while maintaining the structure of the wires attached to the circuit board.

VIII Discussion

The results of this project demonstrate a successful integration of analog sensing, digital signal processing, LED control, and mechanical actuation within a single system. One of the primary challenges encountered was driving a large number of LEDs using the limited output pins of the ADC0804. This was addressed by grouping LEDs and using 2N7000 transistors as switching elements, thereby allowing the system to control higher-current loads without exceeding the ADC's output capabilities. Another challenge involved maintaining the overall current draw below the required 200 mA limit while still achieving sufficient brightness. This required careful selection of resistor values and efficient distribution of LED loads across multiple outputs.

The integration of the thermistor introduced additional complexity due to the nonlinear relationship between temperature and resistance. However, by using a voltage divider configuration, the analog voltage was successfully conditioned into a usable 0–5V range for the ADC. The dual-mode operation, enabled by the SPDT switch, functioned effectively by allowing the system to alternate between real-world temperature sensing and full-on mode. This provided both interactive and controlled testing capabilities.

The mechanical portion of the design, specifically the DC-motor-driven mirror system, posed unique engineering considerations. Ensuring smooth linear motion while preventing electrical damage required the implementation of an electrical slip ring mechanism to handle rotation. This dynamic rotation of mirror spacing significantly enhanced the visual effect, adding complexity beyond traditional static designs.

IX Conclusion

In conclusion, this project successfully designed and implemented an ADC0804-controlled infinity mirror with dual-mode operation and dynamic rotational control. The system effectively converts real-world temperature data into digital signals that drive a large LED array.

The most significant enhancement over a traditional infinity mirror is the incorporation of a DC motor to rotate the LED array. This feature introduces a light tracing effect that enhances the visual complexity of the display and demonstrates the integration of mechanical motion with electronic control systems. The project also meets all specified design constraints, including operating from a regulated 9V supply and maintaining current consumption within the required limits.