COURSE PROJECT TITLE

SEAN GREENWOOD

PROJECT SCOPE

- Overall project idea
  - Create a fluid level sensor without any attachments in the fluid
- Hardware
  - TM1637 4 Digit LED Display – Used for outputting # of steps taken
  - A4988 Stepper Driver – used to swing a 24V line to step the motor
  - MCP6001 – used to amplify the signal from the photodiode
  - Custom PCB – routing, ground plane, and power separation
  - Photodiode – used to detect the laser array
  - Two 5V line lasers – used to produce a refracted line laser through the fluid
  - Custom 3D prints – used for mounting to the stepper motor to create a variable height photodiode fixture
  - NEMA 17 Stepper Motor with lead screw

UMASS LOWELL

PROJECT SCOPE (CONT.)

- Hardware (cont.)
  - Raspberry Pi Pico – used for GPIO and VDD



TM1637

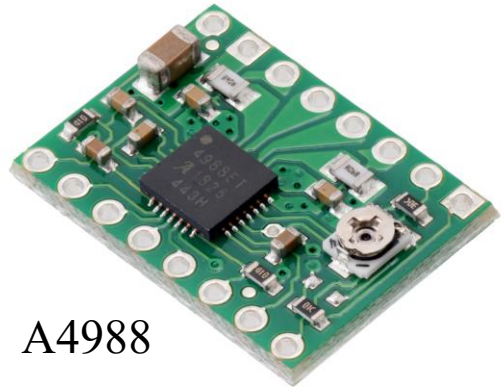

A4988



RP2040



Laser

PROJECT SCOPE (CONT.)

- 3D Printed Components and Stepper Motor

PCB mount

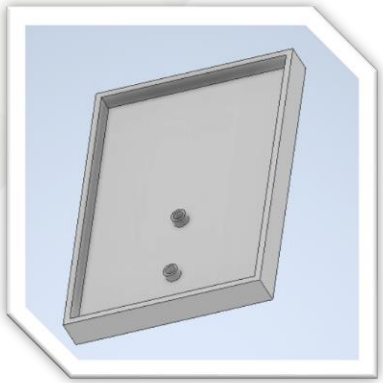

Stepper Motor Mount

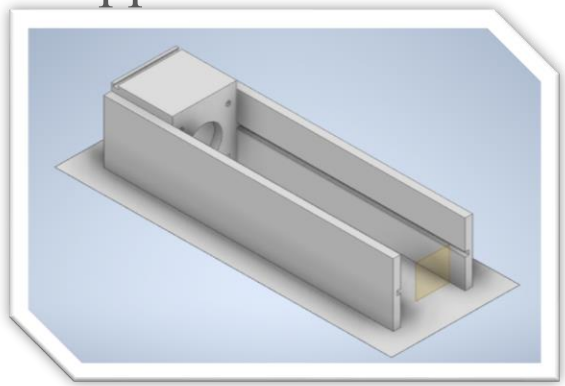

NEMA 17 Stepper Motor

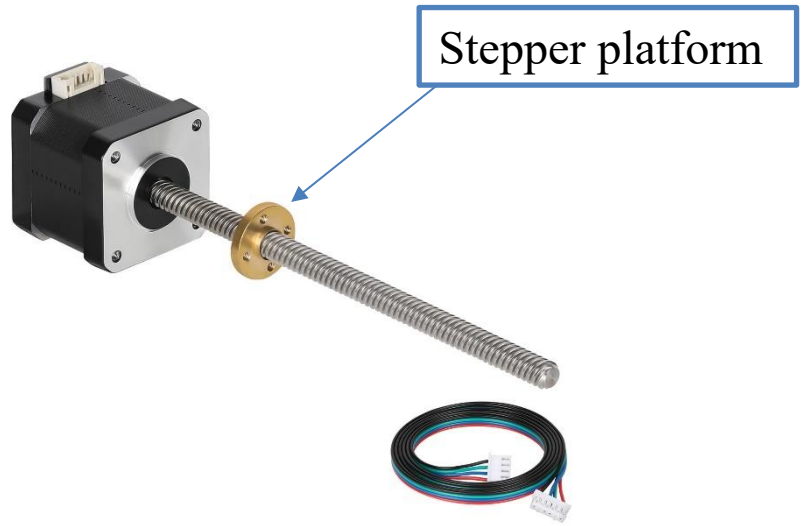

Laser Array holder



Photodiode Holder

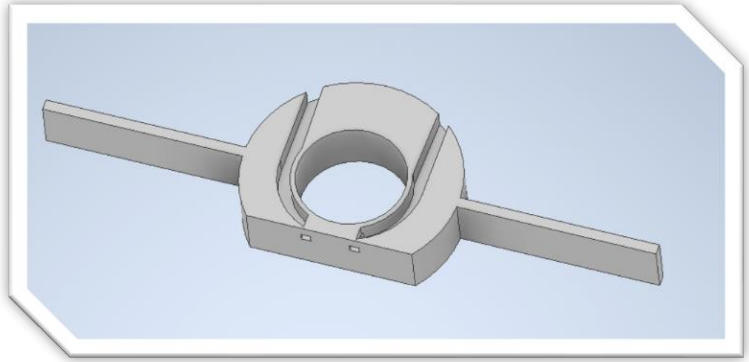

PROJECT SCOPE (CONT.)

- Hardware (Cont.)
  - Custom PCB – 2 layers

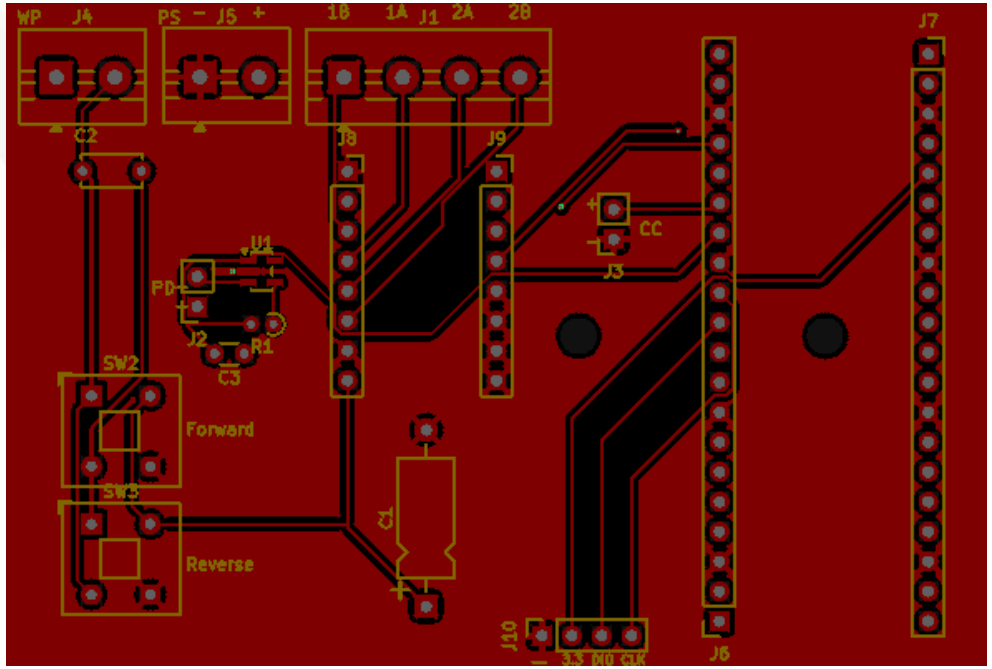

Layer 1

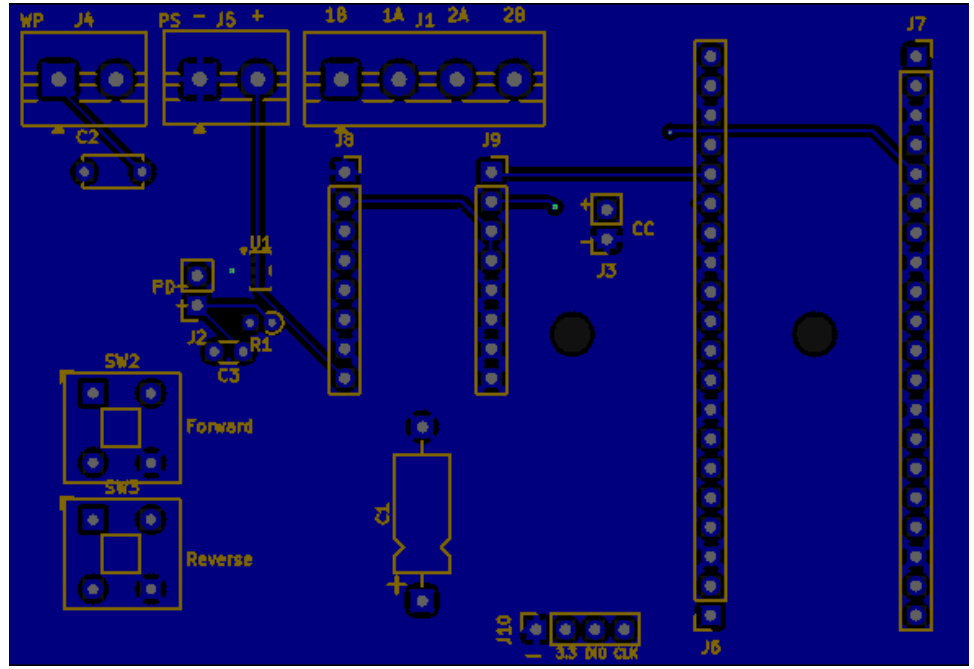

Layer 2

PROJECT SCOPE (CONT.)

- Hardware (Cont.)
  - Custom PCB – Schematic

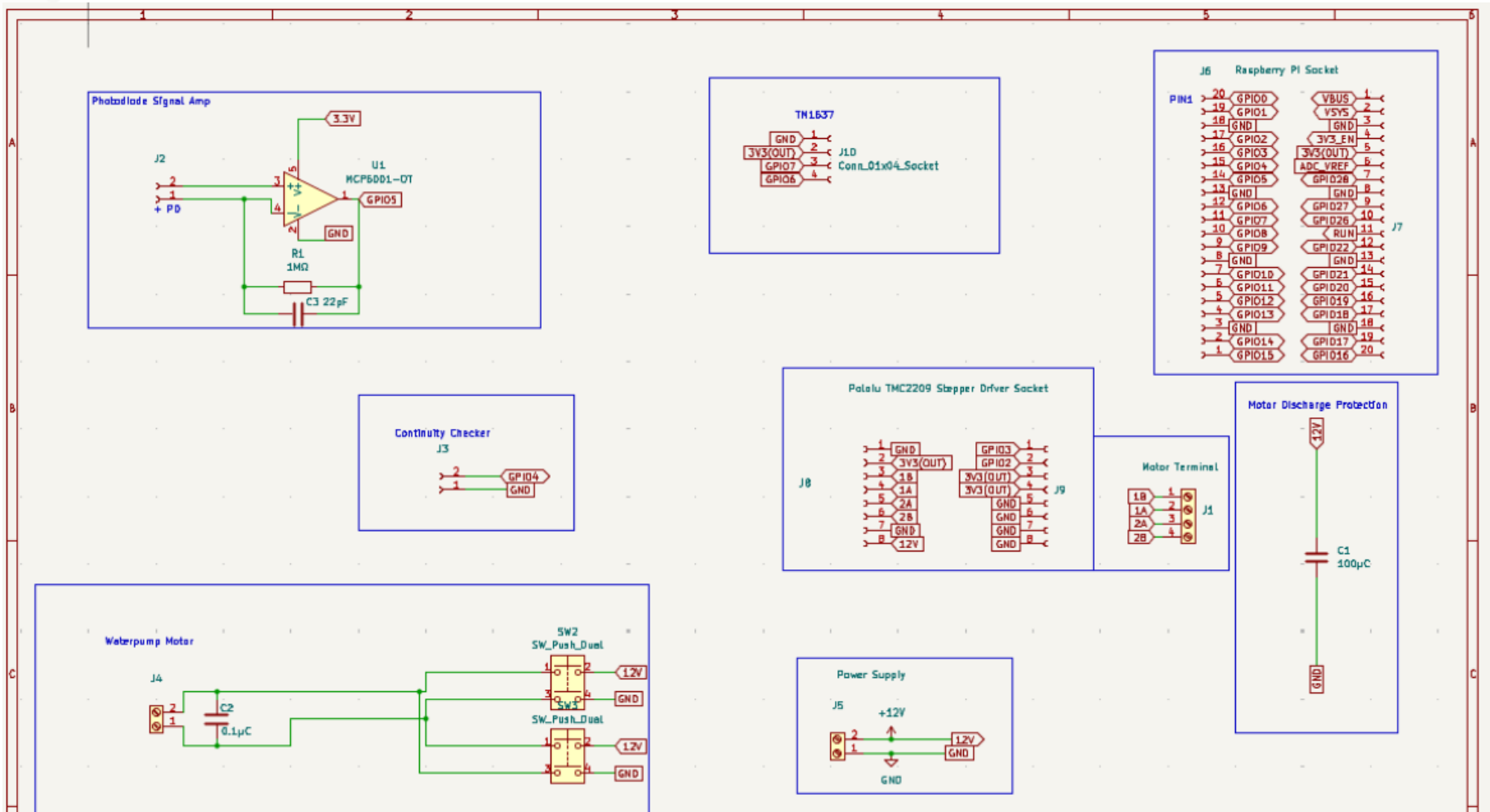

PROJECT SCOPE (CONT.)

- Hardware (Cont.)
  - Custom PCB – Assembled

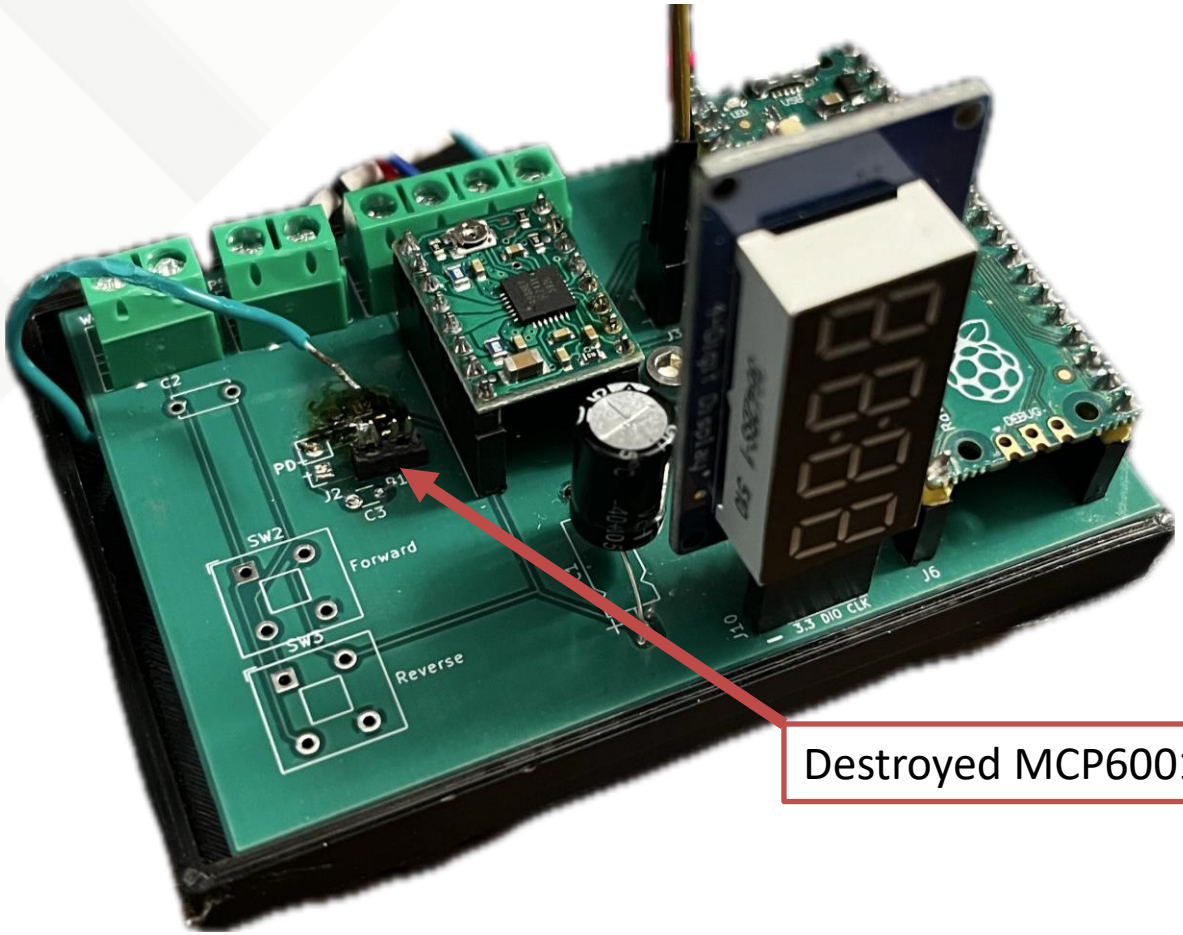

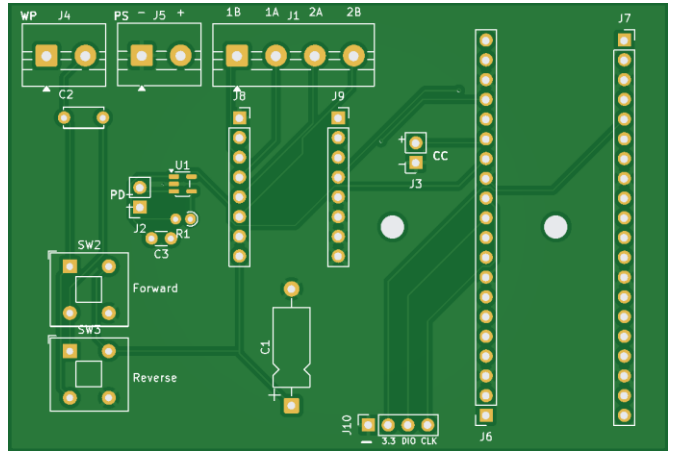

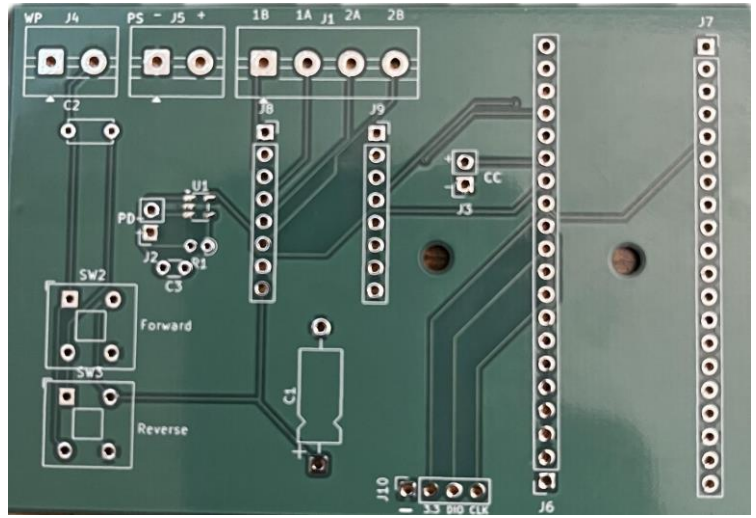

PROJECT SCOPE (CONT.)

- Software
  - Step function - Looping GPIO on, delay, then off methods used for sending a square wave to the A4988 STEP pin
  - Inputs used for the two sensors to calibrate the stepper platform height and the photodiode laser measurement
  - R5 is used to count the number of steps taken and adds 1 every time the Step function is taken
  - Complex TM1637 reporting using GPIO to enable, set brightness, and send digits via addresses

UMASS LOWELL

PROJECT SCOPE (CONT.)

- Software (Cont.)
  - GPIO# Uses
    - GPIO 2 used for stepping the motor with a square wave generated through the step procedure function
    - GPIO 3 used for changing the direction of the motor, GPIO_OUT_CLR for down, GPIO_OUT_SET for up
    - GPIO 4 used for measuring whether or not the stepper platform is all the way at the bottom of the stepper motor
    - GPIO 5 is used for detecting the voltage out of the photoconductive op amp circuit
    - GPIO 6 is used for the CLK function of the TM1637
    - GPIO 7 is used for the DIO function of the TM1637

UMASS LOWELL

PROJECT DEMO

- Description of demo sequences
  - First, the metal plate containing a Photodiode steps down to the base of the stepper motor.
    - The direction is set by sending a 0 from GPIO 3 to the DIR pin on the A4988 stepper motor.
    - To step the motor, it sends a square wave to the A4988 STEP pin.
    - It detects the base of the stepper motor by touching two metal contacts together and inputting a 0 logical level to GPIO Four.
  - Second, the photodiode sends a high logical level to GPIO 5
    - DIR is set to logical 1 by GPIO 3
    - The photodiode is run through a photoconductive op amp circuit, which outputs a logical 1 (when the laser is shown) to GPIO5
    - After each step, the step counter increases by one, allowing the height of the fluid to be calculated.
    - When the photodiode is no longer lit by the laser shown through the liquid portion of the graduated cylinder, then the op amp outputs a logical 0

UMASS LOWELL

PROJECT DEMO (CONT.)

- Description of demo sequences
  - Thirdly, the step counter is transmitted to the TM1637 with the DIO on GPIO 7 and the CLK on GPIO 6
    - The step count is broken into thousands, hundreds, tens, and 1's
    - Each number is then transmitted to the LED display.
- Project Demo Video

  - Video crashes program when uploaded, see Gradescope for video.

LESSON LEARNED

- The original scope was to have 20 photodiodes in a 1x20 array, but this would require more power than the Raspberry Pi could produce and result in a discrete measurement (inaccurate).
  - Instead, a stepper motor was used to step a single photodiode up and down, which allowed for an analog measurement to be taken (exact)
- Another portion of the original scope was to get a water pump working that would pump more water into the system if it was too low.
  - Due to time and monetary constraints, the components needed for this portion could not be sufficiently produced
    - Components that could not be produced: Homemade water pump (Design time – too long), DPST switches (3 weeks lead time), and a DC 12V power supply (expensive or unreliable)

UMASS LOWELL

LESSON LEARNED CONTINUED

- Soldering while 12V supply was active
  - Shorted VDD (3.3V) lines of MCP6001, RP2040 , and A4988 instantly destroying the components
    - The MCP6001 being destroyed meant that the circuit was not able to detect the photodiode, instead, a button was used to short GPIO 5 to the 3.3V rail to simulate a photodiode.
- LED display issues
  - The LED display does not properly show the stepper height
    - This is due to the complexity of the code needed to properly display on this with ARM-Cortex-M0
    - If C or Micro Python were used, then this feature would be significantly easier to enable properly.